S O L U T I O N

THIS EXAM SHOULD BE TAKEN ONLY BY STUDENTS REGISTERED FOR SECTION 2

September 27, 2012 Name _____

ECE201 Linear Circuit Analysis I
Fall 2012, Section 2, MWF 7:30-8:20am
Exam 1

This exam corresponds to learning objective 1.

Solve the following problems. The number of points for each problem is shown in the table below.

Use only the space provided to solve each problem, and copy the answers to the space marked "Answer:..." Do not forget to specify units.

Show all the steps of your solution. Final answers alone will not be considered.

Non-integer answers can be written as a/b or as $c.d$ where d is rounded to 2-3 digits.

Problem	Points
1	/ 25
2	/ 25
3	/ 25
4	/ 25
Total	/ 100

Problem 1

For the circuit below, compute the following quantities: the power delivered by the independent current source, V_2, V_3, the power delivered by the dependent voltage source, and the power dissipated by the 16Ω resistor.

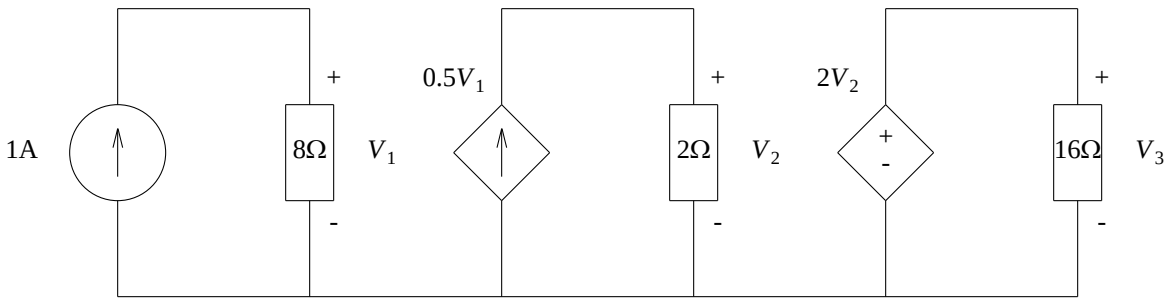

$$V_1 = 1 \cdot 8 = 8\text{V}$$
$$P_{ind} = V_1 \cdot 1 = 8\text{W}$$
$$V_2 = 2 \cdot 0.5V_1 = 8\text{V}$$
$$V_3 = 2V_2 = 16\text{V}$$
$$I_{dep} = I_{16\Omega} = \frac{V_3}{16} = 1\text{A}$$
$$P_{dep} = V_3 \cdot I_{dep} = 16\text{W}$$
$$P_{16\Omega} = V_3 I_{16\Omega} = 16\text{W}$$

Answer:

(5 points) Power delivered by the independent current source = 8W

(5 points) V_2 = 8V

(5 points) V_3 = 16V

(5 points) Power delivered by the dependent voltage source = 16W

(5 points) Power dissipated by the 16Ω resistor = 16W

Problem 2

In the following circuit, determine the variables for nodal analysis as learned in class, write equations for the variables you defined, and solve them.
Using the values of the variables you found, compute the power delivered by the independent voltage source.
Mark the variables you define on the circuit.

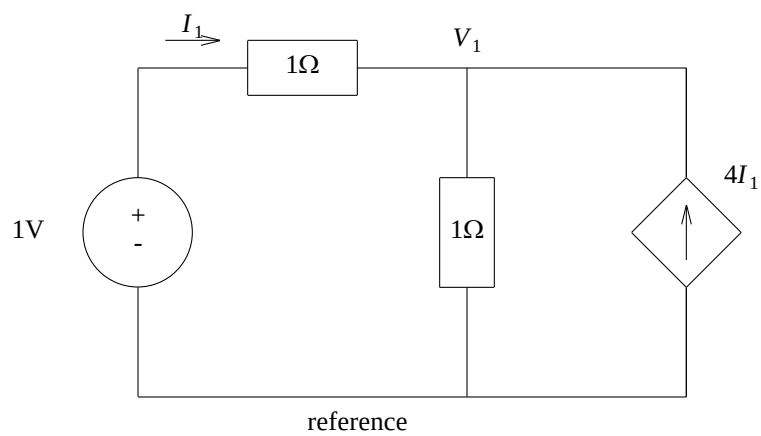

$$I_1 = \frac{1-V_1}{1} = 1-V_1$$
$$\frac{V_1-1}{1} + \frac{V_1}{1} - 4I_1 = 0$$
$$2V_1 - 1 - 4(1-V_1) = 0$$
$$6V_1 = 5$$
$$V_1 = 5/6 = 0.833\text{V}$$

$$I_1 = 1-V_1 = 1/6 = 0.167\text{A}$$
$$P_{1V} = 1 \cdot 0.167 = 0.167\text{W}$$

Answer:

(5 points) Variables for nodal analysis: V_1

(15 points) Values of variables: $V_1 = 5/6 = 0.833\text{V}$

(5 points) Power delivered by the independent voltage source = 1/6W = 0.167W

Problem 3

In the following circuit, determine the variables for loop analysis as learned in class, write equations for the variables you defined, and solve them.
Using the values of the variables you found, compute V_1.
Mark the variables you define on the circuit.

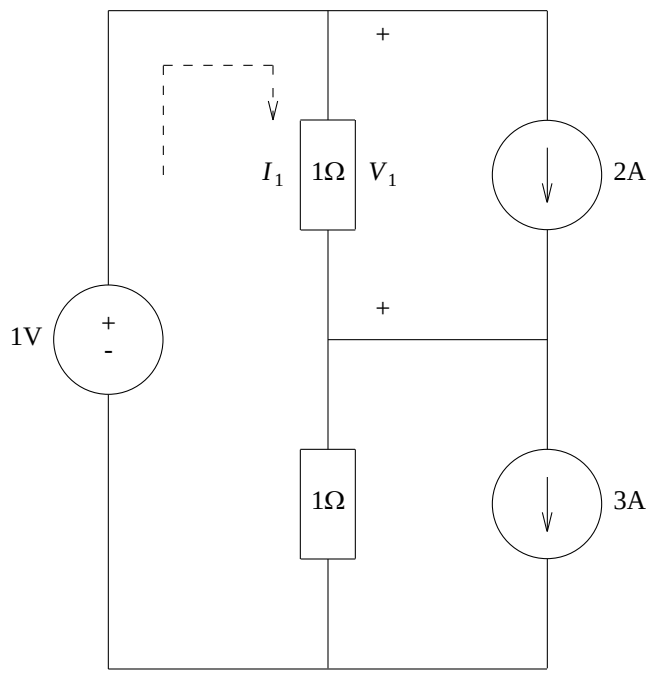

$$1\cdot(I_1-2)+1\cdot(I_1-3)-1=0$$
$$2I_1=6$$
$$I_1=3$$

$$V_1=1\cdot(I_1-2)=1\text{V}$$

Answer:

(5 points) Variables for loop analysis: I_1

(15 points) Values of variables: $I_1 = 3\text{A}$

(5 points) $V_1 = 1\text{V}$

Problem 4

In the following circuit, the goal is to compute v_{out} in two different ways. Two different source transformations were performed for this purpose. This yielded the two circuits shown on the next page.

For the circuits on the next page, find the values of all the resistors and the values of all the sources, and mark v_{out} on each one of the circuits. You do not need to compute v_{out}.

You can use the space below for computations.

Mark all your answers on the circuits.

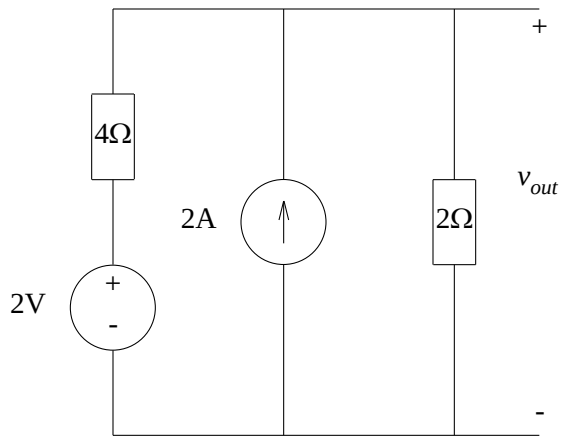

circuit 1 (15 points)

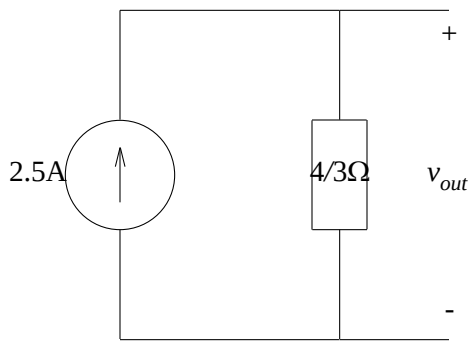

circuit 2 (10 points)

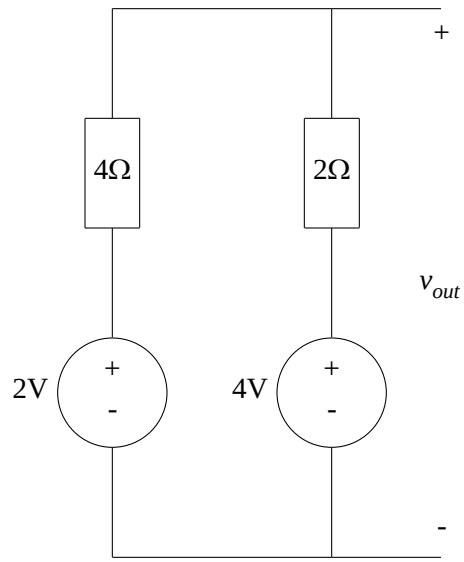

Do not forget to mark v_{out} on the circuits (show the +/- terminals and write v_{out} between them).